Easy 150 titanium

LMY15073

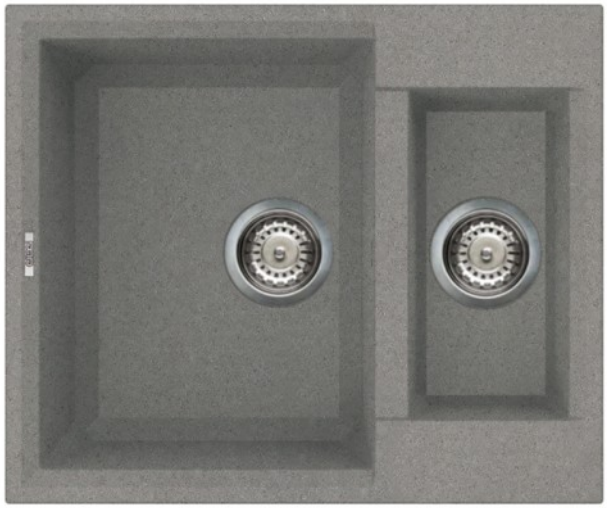

Old product number	LMY15073
Sink unit dimensions	334 x 430 / 160 x 330 mm
Outlet	3,5" outlet
Depth	210 mm / 150 mm
Cabinet	600 mm
Total dimensions	600 x 500 mm
Installation method	Inset

Related Products

Total care

R1303
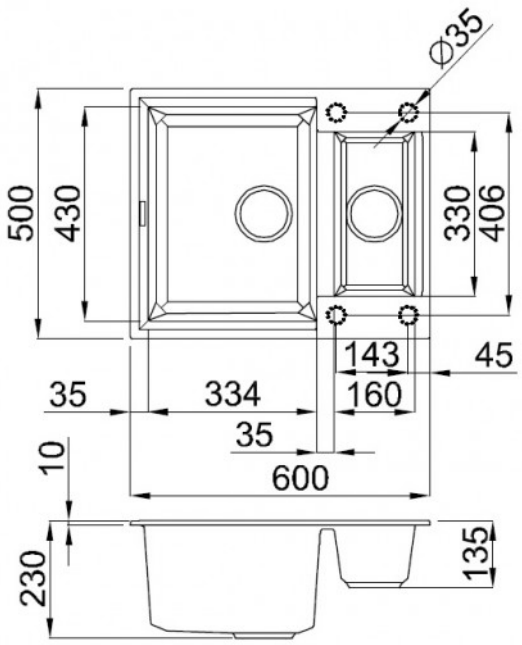
Technische drawing